Loopin' Louie™

INSTRUCTIONS
For 2 to 4 Players

OBJECT:
Be the only player left
with one or more tokens.

CONTENTS:
Game Base, 4 Base Arms, 4 Paddles, Center Cone,
Loopin' Louie in Plane, 12 Tokens with Storage Bag, Label Sheet

APPLY THE LABELS

LOUIE AND PLANE LABELS

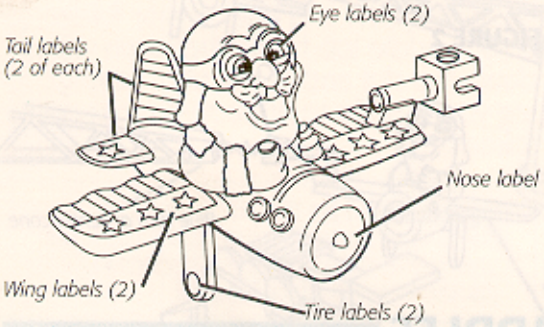

PADDLE LABELS

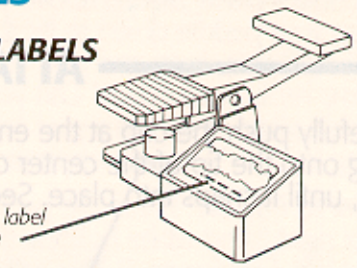

TOKEN LABELS

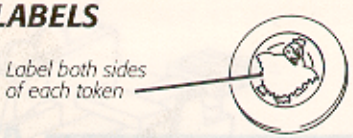

CENTER CONE LABELS

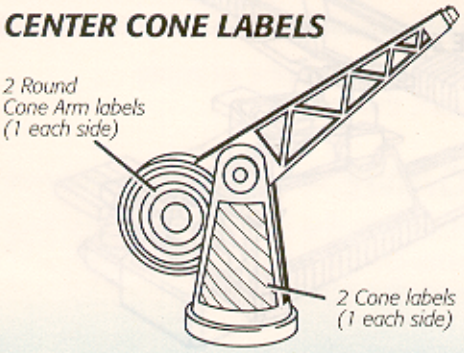

BASE ARM LABELS

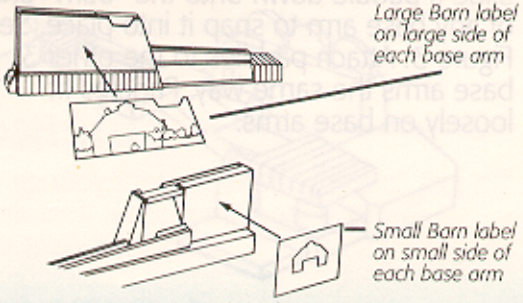

INSERT THE BATTERY

Turn the game base upside-down. Using a screwdriver, loosen the screw to remove the battery door. See Figure 1.

Insert 1 "C" size alkaline battery into the battery compartment. Be sure to match the "+" and "-" symbols shown inside. Then replace the door and tighten the screw.

Now turn the game base right-side up and test the battery by sliding the ON/OFF switch to the ON position. The center peg will turn and you'll hear the motor running. If this doesn't happen, the battery may be weak or improperly installed. Slide the switch to the OFF position after testing the battery.

FIGURE 1

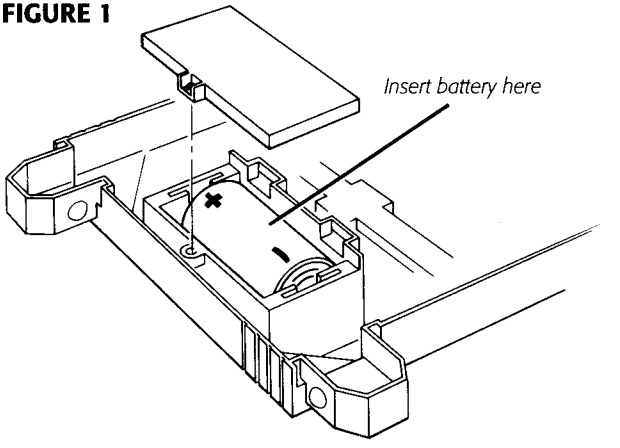

CAUTION: Battery may leak if improperly installed. Remove battery if game will not be used for an extended period of time.

ATTACH PLANE TO CONE

Carefully push the cup at the end of the wing onto the tip of the center cone's blue arm, until it snaps into place. See Figure 2.

FIGURE 2

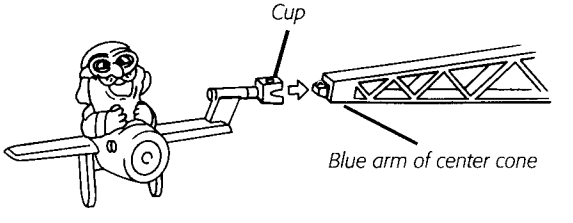

ATTACH PADDLES

Slide a paddle down onto the "barn" end of any base arm to snap it into place. See Figure 3. Attach paddles to the other 3 base arms the same way. Paddles fit loosely on base arms.

FIGURE 3

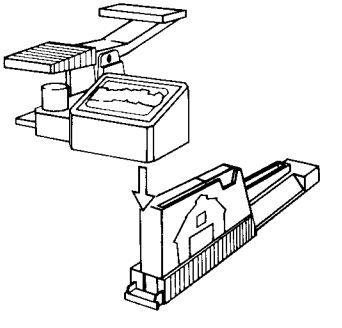

GAME SETUP

1. ATTACH THE BASE ARMS
Place the game base on a hard, flat surface. Attach the 4 base arms to the game base as shown in Figure 4. Assembled base arms are shown in Figure 5.

2. PLACE YOUR TOKENS
Take 3 tokens and place them in the slot above the barn, as shown in Figure 5. All players do the same. Place any extra tokens out of play.

3. FIT THE CONE ONTO THE BASE
Fit the center cone (with Louie's plane attached) onto the center peg in the game base. Turn the cone clockwise slightly until it settles loosely onto the peg.
See Figure 5.

FIGURE 4

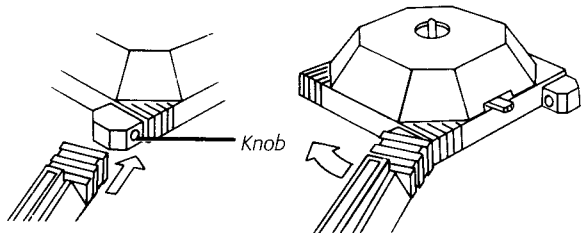

Fit hole in base arm onto knob in game base

Then slide base arm as shown to snap in other knob.

FIGURE 5

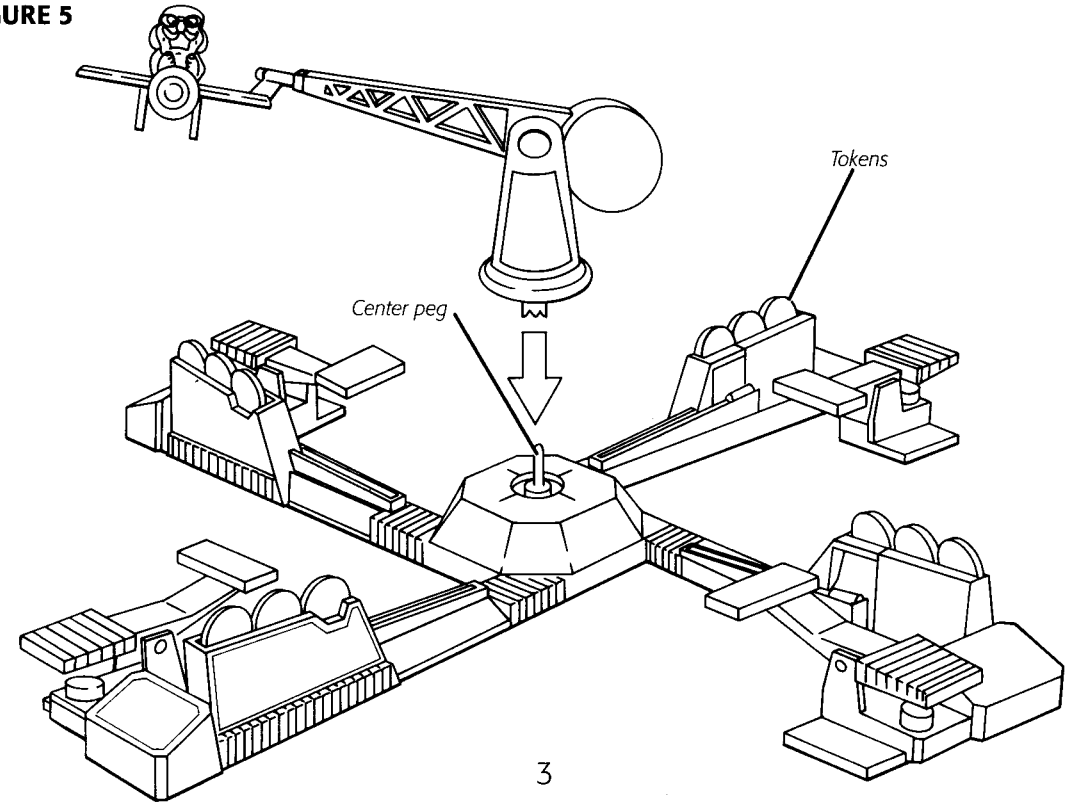

4. PICK A PADDLE POSITION
Your paddle is adjustable -- its position determines how easily you can hit Louie's plane as it passes by. Before playing, decide which position you want -- normal or advanced -- and adjust your paddle accordingly. All players do the same. See Figure 6.

FIGURE 6

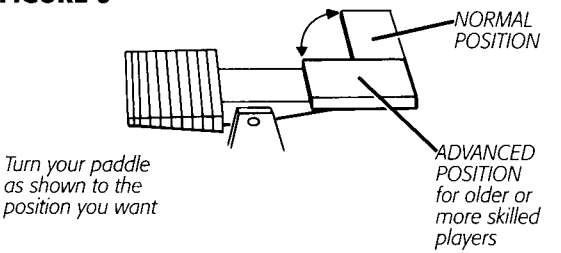

HOW TO PLAY

TAKEOFF!
Lift Louie's plane until it stands vertically above the center cone (the center peg will keep it upright). Now the player closest to the ON/OFF switch slides it to the ON position. Louie's plane will slowly drop down and begin to circle counterclockwise.

PADDLING THE PLANE AWAY
As Louie's plane passes above your paddle, press your paddle down to hit the plane. Louie will spin, loop and dive -- who knows *where* he'll come down? Can you keep Louie's plane away from your tokens, while trying to "aim" Louie at opponents' tokens?

How to Paddle: Press the paddle with your right hand while holding the tab with your left. See Figure 7. This will keep your tokens steady as you play.

NOTE: If you're more comfortable paddling "lefty," hold down the paddle surface labelled "Loopin' Louie" with your right hand.

FIGURE 7

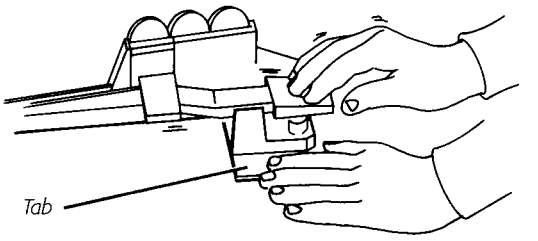

LOSING YOUR TOKENS
If Louie's plane hits one of your tokens (or if you paddle too hard), the token will roll down the slot and out of play. Keep pressing your paddle to protect your remaining tokens!

Losing Your Last Token: If Louie knocks down your last token, you can't win -- but you're still in the game! Keep pressing your paddle to keep Louie loopin'!

HOW TO WIN

All players keep paddling until only one player has one or more tokens in play. That player wins the game!

STORING YOUR GAME

It's just "plane" simple to store your game! Place the tokens in the resealable storage bag. Remove the center cone, then ease the base arms off the game base knobs. Now the parts will fit easily inside the box.

© 1992 Milton Bradley Company. All Rights Reserved. 4343