KLASK RULES VISUAL GUIDE TO SCORING!!!

KLASK™
THE MAGNETIC GAME OF SKILL

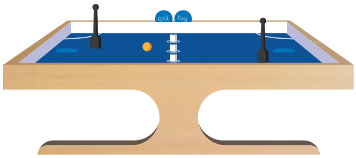

KLASK RULES

WHAT'S INSIDE THE BOX:

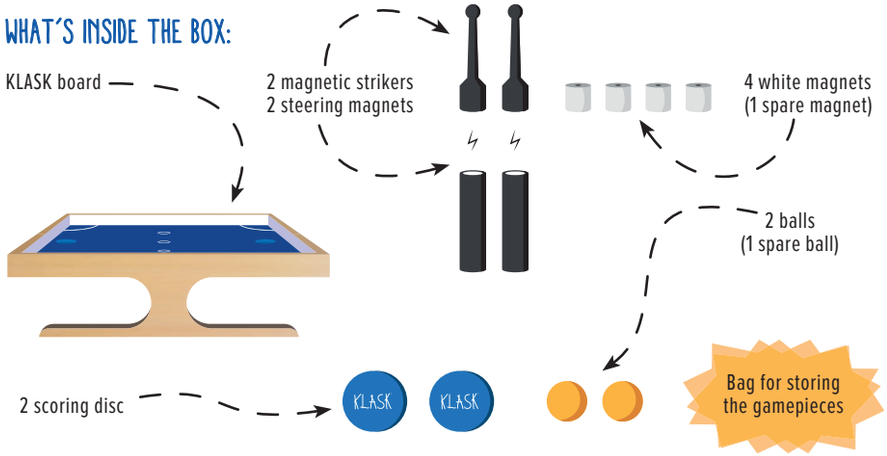

BEFORE YOU START THE FUN:

1. Place the KLASK board on a table between the two players.

2. Place three white magnets on the white fields in the middle of the board.
Note: Be sure to place the magnet pieces with their magnets facing upwards in order to prevent them from moving away from the striker.

3. Insert both scoring disc in the starting position marked with "0" on the scoring slot.

4. Both players have a black magnetic striker that has two sections. Place the striker section on top of the board and the thick steering magnet under the board so that the two sections make magnetic contact.

5. The youngest player starts the game by placing the ball on the starting corner of their choice.

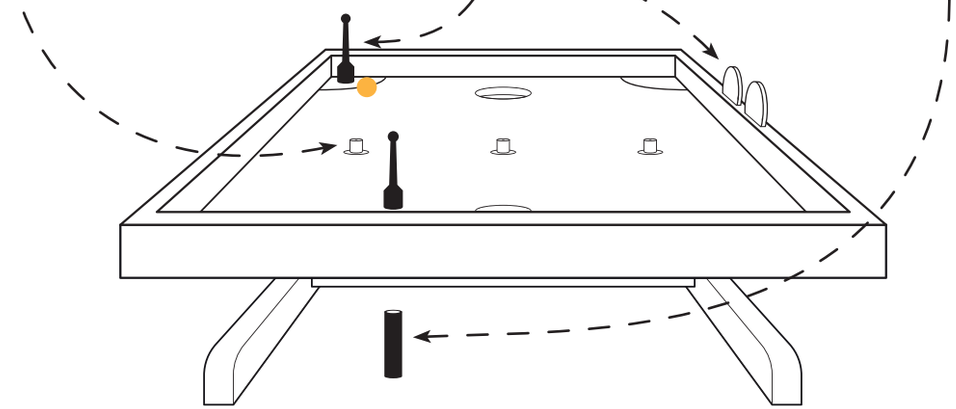

HOW TO PLAY:

Game on! Players hit the orange ball around the field by moving their strikers using the steering magnets under the game board. Players are free to move at all times and there is no order of turn. The aim is to score points by shooting the orange ball into the 'goal' at your opponent's side of the board. You will also need to be careful not to lose control of your striker or fall into the goal on your side, as this will give your opponent a point. You can also use the orange ball to move the white magnets around, but watch out: if two of the white magnets stick to your striker, your opponent gets a point.
The first player to score 6 points wins the game!

THERE ARE 4 WAYS TO SCORE POINTS:

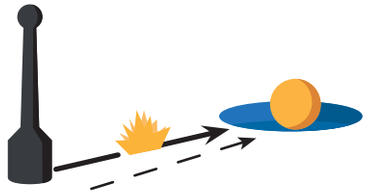

1. If the ball ends up in your opponent's goal and stays there.

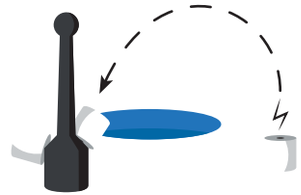

2. If two (or all three) white magnetic pieces stick to your opponent's striker.



3. If your opponent accidentally pulls their striker into their own goal (KLASK).
Note: You will get the point immediately, even if your opponent is able to jump out of the goal using the steering magnet. Rule of thumb: If you hear KLASK it's a point!

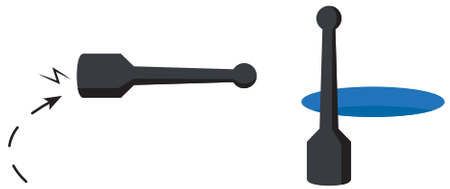

4. If your opponent loses control of their striker and can't get it back under control by using the steering magnet.

EACH TIME YOU GET A POINT:

- You move your scoring disc one point forward in the scoring slot.
- You return all three white magnets to their starting positions at the centre of the board.
- The player who did not score a point 'kicks off' from the corner he chooses.

IMPORTANT! You can score only one point at a time. Even if you shoot the ball into your opponent's goal and - at the same time - he falls into his own goal and attracts two white magnets, you still only get one point.

OTHER RULES YOU SHOULD KNOW:

- If one of the white magnets sticks to a striker, the game continues. If two (or more) white magnets stick to one striker, the opponent gets a point.
- You are not allowed to move the white magnets on the board by using your steering magnet under the board.
- If a white magnet falls over the side of the board, the game continues.
- If the ball falls over the edge of the board, you place the ball on the starting corner closest to the point where the ball fell over and continue the game.

HAVE FUN WITH KLASK.

GET YOUR HAND UNDER THAT TABLE!!

© Oy Marektoy Ltd., Lönnrotinkatu 32 D 51,
00180 Helsinki, FINLAND, www.competo.fi

COMPETO

WARNING! Not suitable for children under 36 months of age due to small parts. Choking hazard. Please keep this box for future reference.
Warning! This toy contains magnets or magnetic components. Magnets sticking together or becoming attached to a metallic object inside the human body can cause serious or fatal injury. Seek immediate medical help if magnets are swallowed or inhaled.

