John D Clair

CUBITOS™



RULEBOOK

AEG

CREDITS

Design
John D Clair

Director of Projects
Nicolas Bongiu

Production
David Lepore

Development
Scot Eaton
John Goodenough

Art Direction
Josh Wood

Graphic Design
Phil Glofcheskie
Matt Paquette Co.

Art
Banu Andaru, Felicia Cano, Jacqui Davis, Kali Fitzgerald, Ryan Iler

Editing
Richard A. Edwards

Proofreading
Nicolas Bongiu, Ryan Dancey, Todd Rowland, Mark Wootton, Erik-Jason Yaple

Playtesters
Endre Balogh, Eva Balogh, Mona Balogh, Neil Baumgartner, Bryan Beck, Leon Blight, Nicolas Bongiu, Chris Buckley, Chis Buskirk, Csilla Clair, Jackson Clair, Ryan Dancey, Scot Eaton, Eric Elder, Patricia Gavin, Nye Green, Rhys Green, Sean Growly, Mark Harbison, Hershey Harris, Terry Hughes, Ian Ingoldsby, Neil Kimball, Michael Kutan, David Lepore, Ben Lesel, Joel Livingston, Eric Martinez, Andy McGuire, Robin Norwood, Kyle Nunn, Kaz Nyborg-Anderson, Vladimir Orellana, Matt Paquette, Shea Parker, Will Pell, Kaleb Pomeroy, Todd Rowland, John Sanderson, Taylor Shuss, Dwight Stone, Richard Tatge, Thorin Tatge, Manolis Trahiotis, Tracey Trouten, Andrew Voigt, Pace Wilder, Josh Wood, Mark Wootton, Erik-Jason Yaple, Sara Yordonov, John Zinser

Copyright & Contact

© 2020 Alderac Entertainment Group. Cubitos and all related marks are ™ or ® and © where indicated Alderac Entertainment Group, Inc.
2505 Anthem Village Drive Suite E-521 Henderson, NV 89052 USA.

All rights reserved. Printed in China.
Warning: Choking hazard!
Not for use by children under 3 years of age.

Questions?
Email: customerservice@alderac.com
www.alderac.com/cubitos



IN THIS BOOK

Introduction 3
Game Overview 3
Goal 3
Components 4
Setup 6
Champion Tours 8
Tour de Cube 8
Dice Overview 9
- Movement 9
- Money 9
- Credits 9
- Ability Symbols 9
- Power Symbols 9
- Gray Dice 9
- Start Player Die 9
- Using Dice 9

Using Abilities 9
How to Play 10
- Roll Phase 10
  - Draw 10
  - Roll 10
  - Move Hits to Active Zone 10
  - Busting 10
- Draw Amount 11
- Run Phase 11
  - Use Abilities, Resolve ⚔, Determine Total 🟤👣 . . 11
  - Move 11
  - Buy 11
  - Discard 11

Space Descriptions 12
End of Game 12
Additional Rules 13
Card Clarifications 14
Dice Box Assembly 19

CUBITOS™

A Game by John D Clair
For 2-4 players, ages 14 and up



Introduction

Cubitos™ is a cube-shaped world populated by little cube creatures. Every year the Cubitos population gets together to hold the Cube Cup; a race of strategy and luck to determine the Cubitos Champion. Each participant has a runner, represented by a character on the racetrack, and a support team, represented by all the dice you roll. The support team starts off fairly small, but gradually, through smart choices and a bit of luck, improves into an expert racing crew powering your runner forward!

Game Overview

Players take on the role of runners in the annual Cube Cup race. Each round you roll dice and use their results to run along the racetrack, buy new dice, and use abilities. But you must be careful not to push your luck too much or you could bust!

Goal

The player who reaches the finish space first wins and becomes the new Cubitos Champion!

COMPONENTS

Your game should include the following. If it does not, please contact customerservice@alderac.com for assistance.

8 x Runner Figures

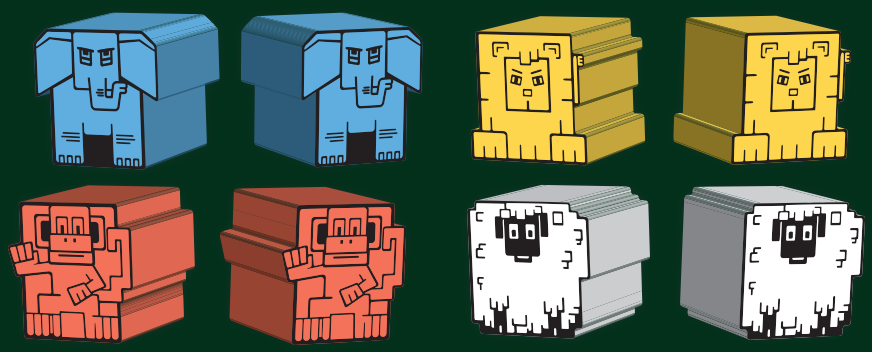

Starting Dice consisting of:



28 x Light Gray Dice

12 x Dark Gray Dice

1 x Start Player Die



56 x Ability Cards consisting of:



7 x Cards | 7 x Cards | 7 x Cards | 7 x Cards | 7 x Cards | 7 x Cards | 7 x Cards | 7 x Cards

80 x Ability Dice consisting of:

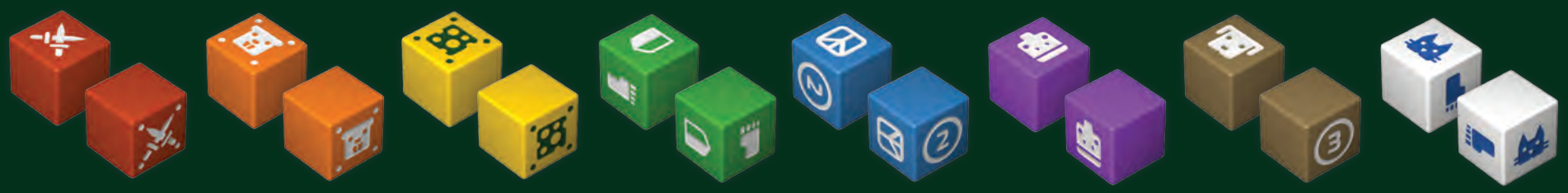

10 x Red Dice | 10 x Orange Dice | 10 x Yellow Dice | 10 x Green Dice | 10 x Blue Dice | 10 x Purple Dice | 10 x Brown Dice | 10 x White Dice

4 x Player Boards



1 x Fan Track



2 x Double-sided Racetracks



4 x Phase Tokens

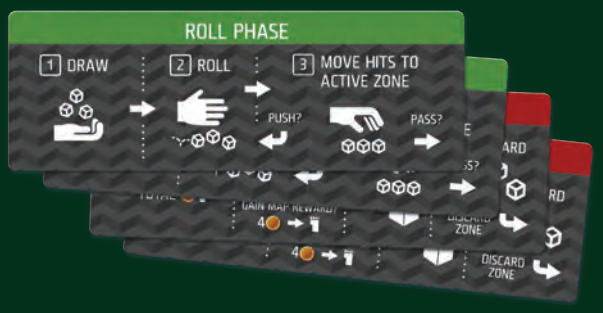

40 x Credits consisting of:



24 x 1-point tokens



16 x 5-point tokens

25 x Draw Tokens



12 x Dice Boxes

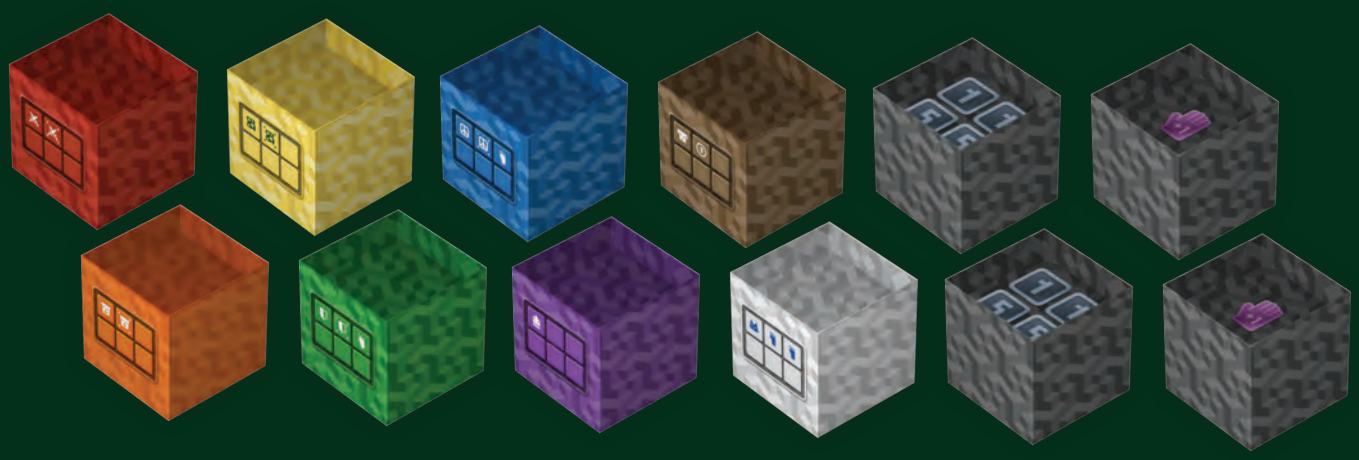

1 x Storage Box



To assemble the dice boxes, follow the steps shown in the diagram on page 19 or visit the following link to view an assembly video: www.alderac.com/cubitos

SETUP

1. Set Up Players

Each player chooses a color and takes the following:

- 2 Runner figures of their color
- 1 Player board of their color
- 1 Phase token
- 7 Light gray starting dice
- 2 Dark gray starting dice

Players should place their phase token next to their player board with the green "**Roll Phase**" side facing up **(1a)**.

Players should place their starting dice in their **Draw Zone** on their player board **(1b)**.

2. Choose Card Set

Different sets of ability cards will make the game feel different each time you play. Choose from one of the card sets listed on page 8. Then return any unused cards to the game box as they will not be used during this game.

When players are first learning the game, we suggest using this card set from "Race 1 [First Game]" on page 8.

- *Smelly Cat*
- *Rich Dog*
- *Mr. Soldier*
- *Rock On*
- *Dugout*
- *Rollosaurus*
- *Reckless Cheese*
- *Bob*

3. Set Up Racetrack

Players can either choose a racetrack or use the chosen card set's track suggestion (the "Nothing Goes Right" track is recommended for first-time players). Place the track in the center of the playing area **(3a)**. Then place 1 runner figure from each player on the start space **(3b)**.

Place the fan track next to the racetrack **(3c)**. Then place 1 runner figure from each player on the bleachers **(3d)**.

Place the ability cards from the chosen card set around the racetrack **(3e)**.



4. Set Up Dice Trays

Place boxes next to their matching color ability card so their tray is facing up. Then place all of the corresponding dice in each box's tray.

Dice placed in the boxes' trays are available for players to buy during the game.

Make a pile of unused gray dice near the play area.

5. Set Up Token Trays

There are 4 other boxes for storing components when you are not playing. During the game these boxes are designed to be used as token trays for the ⬛ and +1. Place these boxes so their tray is facing up around the play area. Split the ⬛ roughly evenly into 2 trays and do the same with the +1 into the other 2 trays. If it's helpful, a tray of each token type can be put at opposite ends of the table for easier accessibility for all players.

6. Determine Start Player

Select a player at random and place the start player die in their **Roll Zone**. The player with the start player die is considered the start player during that round.

Players are now ready to begin the game!

CHAMPION TOURS

The following card sets are a series of seven races with all 56 ability cards being used once. This allows players to experience every ability over the course of seven games.

Race 1 (First Game)

This setup is recommended for your first game. Abilities are on the simpler end and you can expect some straight up push your luck dice rollin'!

- *Smelly Cat*
- *Rich Dog*
- *Mr. Soldier*
- *Rock On*
- *Dugout*
- *Rollosaurus*
- *Reckless Cheese*
- *Bob*

TRACK SUGGESTION: Nothing Goes Right (1 lap)

Race 2

Cheesy fans, a dino combo, or a fishy llama? This set encourages you to get fans and be more particular about the color of dice you roll together.

- *Cat Tastrophy*
- *Captain Bark*
- *Punch Guy*
- *Piña Cubelada*
- *Reliever Beaver*
- *Dancing Dino*
- *The Big Cheese*
- *Undercover Fish*

TRACK SUGGESTION: Ahead of the Curve

Race 3

Claw your way to popularity and get some general fan points. This set also encourages collecting fans, though with some well-dressed cheese and clever combos you may not need them for victory.

- *Fat Cat*
- *Wizard*
- *Supah General!*
- *Keep on Rollin'*
- *Benchwarmer*
- *Cubasaurus*
- *Ledercheesen*
- *Llama-rama*

TRACK SUGGESTION: Testing the Waters

Race 4

Is it time to wikiwiki or stink it up? Gray dice look a lot nicer in this set and a vacationing llama might know some shortcuts.

- *Dope Cat*
- *Dapper Doggie*
- *Jacques Couteau*
- *Pineapple Rocks*
- *Batter Beaver*
- *Wikiwiki Dinosaur*
- *Stinky Cheese*
- *Bahama Llama*

TRACK SUGGESTION: Still Waters Run Deep

Race 5

Is it time for the crab to be champion with a magic llama and an army of Cubitos at his back? You bet Mr. Bats and his malfunctioning Jurassic cheese cows may have something to say about that!

- *Broken Cow*
- *Dr. Livingstone*
- *Champion*
- *Up to 11*
- *Mr. Bats*
- *You Bet Jurassican*
- *Bad Cheese*
- *Llama Shaman*

TRACK SUGGESTION: Ahead of the Curve

Race 6

There is some broken combo nonsense in this set, but watch out that the cheese doesn't skip all that and just do it on their own.

- *Fast Cat*
- *Mr. Dog*
- *Crabby*
- *Rolling Stoned*
- *The Babe*
- *Shimmy Shimmy Dino*
- *The Cheese Stands Alone*
- *Stogie*

TRACK SUGGESTION: Testing the Waters

Race 7

This set closes out the Champion tour with a 2 lapper, so plan for the long haul. Tip: Punk Fruit and Pinch Eater can make a great combo.

Note: When using the ability for Pronto Bronto, only count red lines to the end of the current lap; not the end of the race.

- *Schmutz*
- *Muggles*
- *El Bandito*
- *Punk Fruit*
- *Pinch Eater*
- *Pronto Bronto*
- *Cheese Boy*
- *Chilly McChillster*

TRACK SUGGESTION: Nothing Goes Right (2 laps)

TOUR DE CUBE

The following are additional card sets for experienced players.

Combotastic

Get ready to bend your mind, as the difference between the right dice and the wrong dice can be combotastic or llama-licous.

- *Dope Cat*
- *Captain Bark*
- *Mr. Soldier*
- *Piña Cubelada*
- *Pinch Eater*
- *You Bet Jurassican*
- *Cheese Boy*
- *Bob*

TRACK SUGGESTION: Testing the Waters

Such Much Fans

This race is a popularity contest. Play aggressive and bust hard, it's not too bad here.

- *Cat Tastrophy*
- *Rich Dog*
- *Supah General!*
- *Punk Fruit*
- *Mr. Bats*
- *Wikiwiki Dinosaur*
- *The Big Cheese*
- *Chilly McChillster*

TRACK SUGGESTION: Ahead of the Curve

Grand Finale

This is it, the grand finale! All the Cubitos' hopes and dreams are at stake. This race is more a marathon than a sprint, so plan accordingly.

- *Smelly Cat*
- *Dapper Doggie*
- *El Bandito*
- *Rolling Stoned*
- *The Babe*
- *Cubasaurus*
- *The Cheese Stands Alone*
- *Stogie*

TRACK SUGGESTION: Use racetracks Still Waters Run Deep and Testing the Waters. Players begin at the start of track Still Waters Run Deep and end at the finish of track Testing the Waters. Place the boards such that the finish of track Still Waters Run Deep is adjacent to the start space of track Testing the Waters. It costs 1 to move from the finish space on track Still Waters Run Deep to the start space on track Testing the Waters.

Create Your Own

You can also create your own card sets! While you can make the setup however you want, including randomly, the following are some tips to ensure a fun game. Make sure you have a reasonably balanced distribution of costs (e.g. include at least 2 or 3 ability cards that cost 5 or less). Also try to include at least 1 ability card that lets you lose dice or draw extra dice.

DICE OVERVIEW

Cubitos features a variety of dice and symbols, as described below.

MOVEMENT

You use movement to move your runner figure along the racetrack.

MONEY

You spend money to buy new dice, additional movement, and pay other costs.

CREDITS

The only die that has this symbol is the start player die. You use this symbol to gain 1 token.

Unlike which must be spent or lost at the end of the round, can be saved to be used during a future round.

ABILITY SYMBOLS

You use these symbols on your dice to use abilities on their corresponding card.

POWER SYMBOLS

Unless otherwise stated on the ability card, the power symbol is identical to the regular ability symbol. However, some ability cards have a section with a symbol indicating an effect the power symbol does **in addition to** the regular effect.

All abilities, unless specified, are optional to resolve. But note, if you roll a power symbol and choose to resolve the regular ability portion, you **must** also resolve the extra power ability.

GRAY DICE

Each player begins the game with 7 light gray and 2 dark gray starting dice. Dark gray dice have 1 and 1 , while light gray only have 1 without any .

Light and dark gray are both considered "gray dice" for rules and abilities.

Light and dark gray dice are considered to have a cost of zero. Players cannot buy gray dice, but unused gray dice can be gained with certain abilities.

Any gray dice not being used can accumulate in a pile somewhere on the table. These are still considered to be in a "tray" for abilities that allow you to gain dice.

START PLAYER DIE

The start player die is an extra die that you roll when you are the start player. It does not count towards the total amount of dice you roll that round (see page 11).

The start player die is always passed to the next player clockwise at the end of each round, so it cannot otherwise be bought, lost, traded, or taken using any abilities or effects.

This die also helps determine certain timing rules and tiebreakers.

Using Dice

You will use the face up side of dice in your **Active Zone**. Each die can only be used once. To remember that you have used a die, you can simply turn it to a blank side.

Dice typically gain you to buy new dice, or to move your runner figure along the racetrack, or some ability as described on the corresponding card.

Some abilities refer to **active dice**. All of the dice in your Active Zone are considered active dice, regardless if they are showing a symbol or a blank.

USING ABILITIES

With the exception of gray starting dice and the start player die, all other dice have a corresponding ability card. Unless specifically stated otherwise, using an ability is optional.



1 COST
You must spend this amount of and/or to buy 1 die of the corresponding color.

2 ABILITY
This describes what the symbol on the die does when you use the die.

3 DICE SIDES
This image is just for reference and shows what the 6 sides of the dice are.

Each ability states when it can be used during the round, as described below:

Now

Now abilities are used immediately after the die with the ability symbol is placed in your Active Zone. If multiple Now abilities are placed in your Active Zone at the same time, you resolve them in the order of your choosing.

Active

Active abilities are used as the ability instructs so long as the die with the ability symbol is in your Active Zone. Some active abilities will specifically tell you when the die can be used. Others will have an ongoing effect so long as the die is in your Active Zone. Others may not indicate a specific time when you can use the die, in which case it can be used at any time.

Run

Run abilities can be used only during the Run Phase. If you have multiple Run abilities, you may use them in any order.

All dice faces that show a , , or a are also considered run abilities.

HOW TO PLAY

Cubitos is played in a series of rounds. During each round all players will first complete a **Roll Phase**, followed by a **Run Phase**. Once all players complete a Run Phase, the start player die is passed to the next player clockwise around the table and a new round begins! Players continue playing rounds until the game ends.

ROLL PHASE

Players complete this phase at the same time.

During the Roll Phase, you must complete the following steps in order:

1. Draw



Move dice from your **Draw Zone** to your **Roll Zone** until the number of dice in your Roll Zone is equal to your **draw amount**, which at the start of the game is 9. You may choose which dice to draw. Your Roll Zone is the table space above your player board.

You will usually start each round with some dice already in your Roll Zone left there from the prior round. For example, if your draw amount is 9 and you already have 2 dice in your Roll Zone, then you will only add 7 more dice from your Draw Zone to your Roll Zone.

If you need to draw more dice but do not have any in your Draw Zone, move **all** dice from your Discard Zone to your Draw Zone and then continue drawing.

2. Roll



2.1 ROLL

Take **all** of the dice in your **Roll Zone** and roll them into your Roll Zone.

2.2 CHECK IF YOU BUST

If you roll any hits, proceed to step 3. If your roll results in all misses, you might bust.

You risk busting only if you have ever had at least 3 dice in your **Active Zone**, or if you already risked busting during the current Roll Phase (see "Busting with Fewer Dice" on page 13).

When you risk busting and your roll results in all misses, then you **bust** and your Roll Phase is over (see "Busting" on this page).

Hits & Misses



MISS

Dice that have a blank side showing are considered a **miss**.



HIT

Dice that have something other than a blank side showing are considered a **hit**.

Some abilities refer to **active dice**. All of the dice in your Active Zone are considered active dice, regardless if they are showing a symbol or a blank.

3. Move Hits to Active Zone



Move all your hits to the Active Zone on your player board and leave any misses in your Roll Zone.

You must now choose to either **push** or **pass**.

If you choose to **push**, then return to step 2.1 and roll again. However, if you have 3 or more dice in your Active Zone, then you risk busting by choosing to push.

If you choose to **pass**, then you are done with the Roll Phase. Flip your phase token over to the red Run side to indicate that you are ready for the Run Phase. Wait until all other players have completed their Roll Phase and then all players together move on to the Run Phase.

In this manner, you continue until you either pass or bust. Eventually all players will have either passed or busted, at which point all players move on to the Run Phase.

Busting

If you bust, complete the following steps:

- You **must** move all dice from your Active Zone to your Discard Zone.
- As a bonus, you **may** move any dice from your Roll Zone to your Discard Zone; any dice that you do not discard in your Roll Zone stay there for the next round.
- Advance your runner figure 1 space on the fan track and gain any  and  shown on the space you just moved to.

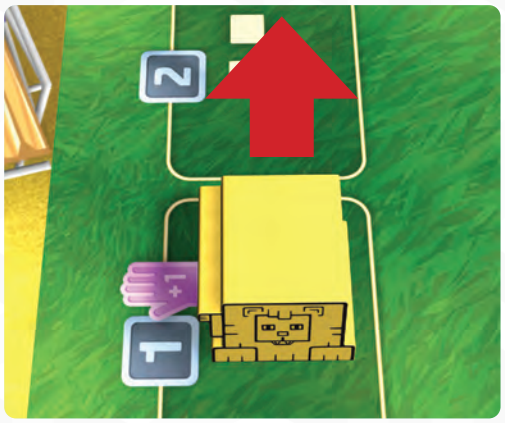

Your Roll Phase is now over.
Flip your phase token over to the red Run side.

Roll Phase Timing Rule

Most of the time, players can resolve their entire Roll Phase simultaneously and independent of the other players. Occasionally, players may wish to wait and see what the other players do before choosing to push or pass. In these cases, the player with the most dice in their Roll Zone must act first.
If 2 or more players are tied for the most dice, then break the tie in clockwise order beginning with the person who has the start player die.

DRAW AMOUNT



BASE DRAW
All players begin the game with a draw amount of 9, as indicated by the draw symbol on the player board's Roll Zone.



HAND TOKENS
Your draw amount **permanently** increases +1 for each +1 you gained by advancing on the fan track (see "Busting" on page 10).

RED LINES
Your draw amount **temporarily** increases +1 for each red line on the racetrack that you are currently behind the leading runner figure. This bonus will continually change as the race progresses.

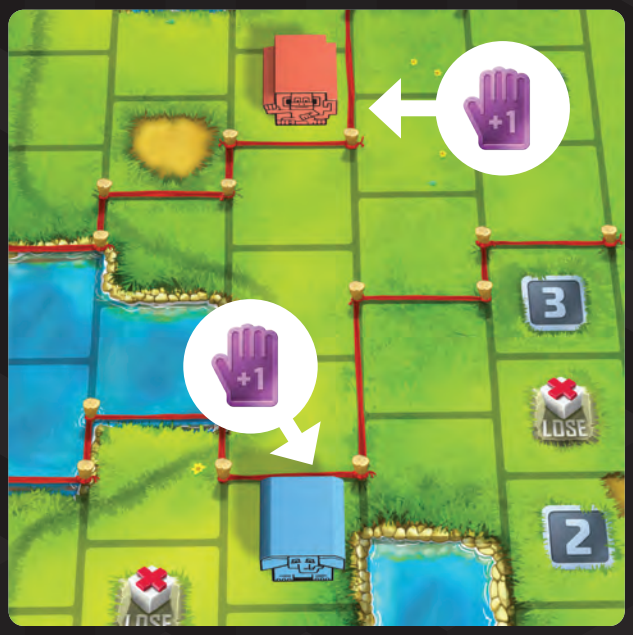



Remember: The start player die does not count towards your draw amount. This is a "free" die that the start player rolls without it counting towards the dice in their Roll Zone.

RUN PHASE

The Run Phase begins after all players have completed their Roll Phase and flipped their phase token over to their Run side. Players complete the steps of this phase at the same time.

During the Run Phase, you must complete the following steps in order:

4. Use Abilities, Resolve ⚔, Determine Total 🟠👣

Players may use any Run abilities they have and wish to use. When all players are ready, they compare the total ⚔ in their Active Zone and resolve the effect of the red card (see "Compare ⚔" on page 13).

Then players may continue using abilities and ultimately determining their total 🟠 and 👣 (see "Using Abilities" on page 9).

5. Move

For every 👣 you have, you may move your runner figure 1 space on the racetrack.

You may also spend 4 🟠 and/or ⬛ to gain 1 👣. There is no limit to the amount of 🟠 and ⬛ you may spend to gain 👣. Note that this does not work the other way; you cannot spend 👣 to gain 🟠 or ⬛.

If a space already has a runner figure, you may move into the space normally; other runners do not block your movement.

You do not have to use all of your 👣 (movement is optional). However, any 👣 not used is lost.

If you end your Move step in a reward space, and you didn't start the round in that space, you gain that reward (see "Space Descriptions" on page 12).



6. Buy

You may spend some or all of your 🟠 and ⬛ to buy new dice. 🟠 gained is a non-physical total number that can only be used during the current round; any 🟠 you don't spend is lost at end of the round. ⬛ gained are accumulated with physical ⬛ tokens; any ⬛ you don't spend is kept for future rounds.

The cost to buy a new die is listed in the upper right corner of its ability card.

You may buy up to 2 dice each round. If you buy 2 dice, they must be different colors; you cannot buy 2 of the same die.

When you buy a die, place it in your **Discard Zone**.

7. Discard

Move all dice from your Active Zone to your Discard Zone. **DO NOT** discard dice in your Roll Zone; those dice stay there for the next round. Then, flip your phase token over to the green Roll side. You must wait until all other players have completed their Run Phase and flipped their phase token over to their Roll side.

When all players have completed their Run Phase, pass the start player die to the next player clockwise and place it in their Roll Zone. Then, all players proceed together to a new Roll Phase.

Run Phase Timing Rule

Most of the time, players can resolve their entire Move, Buy, and Discard steps simultaneously and independent of the other players. Occasionally, players may wish to wait and see what the other players do before making a decision. Alternatively, a tray may not have enough dice left for each player who wants to buy a die of that type. In these cases, players must take turns resolving their entire Move, Buy, and Discard steps, beginning with the start player and proceeding clockwise.

SPACE DESCRIPTIONS

Standard Terrain



OPEN
Can be moved into normally.



WATER
Cannot be moved into.

EXCEPTION: Some abilities allow you to move into water spaces, as described on the card.

Reward Spaces

If you end your Move step in a reward space, and you didn't start the round in that space, you may gain its reward. Moving through a reward space gives you nothing.



GAIN CREDITS
Gain the indicated amount of ⬛.



GAIN A FAN
Advance your runner figure 1 space on the fan track and gain the +1 and ⬛ for that space if any.



LOSE A DIE
Take any 1 die of your choice in any of your zones and return it to its tray. Gray dice lost this way can be returned to the box or accumulate in a pile somewhere on the table.



GAIN ANY DIE
Gain any 1 die in any tray for free without paying its cost and place it in your Discard Zone. This has no effect on your ability to still buy 2 dice of different colors as normal.



GAIN ANY DIE (COST)
Gain any 1 die in any tray for free that has a cost equal to or less than the cost listed on the reward space and place it in your Discard Zone. In the example reward space above, you may take any die that costs 0 to 4 🟠 without paying its cost. This has no effect on your ability to still buy 2 dice of different colors as normal.

Movement Effects

Movement effects may be resolved during your Move step when you are on the movement effect space. They may be activated mid-movement.



🟠 SHORTCUT
Pay the required amount of 🟠 to move to the indicated space (the destination space has the same symbol and color, but is not surrounded by standing stones). If you cannot pay the full amount of 🟠, you cannot use the shortcut.



👣 SHORTCUT
Pay the required amount of 👣 to move to the indicated space. If you cannot pay the full amount of 👣, you cannot use the shortcut.

For example, if you had 10 👣 and started 2 spaces away from this space, you could use the first 2 👣 to move into this space, then spend 7 👣 to take the shortcut, and finally have 1 👣 left over to move 1 more space.



JET PACK
When you are in this space, double your remaining 👣.

For example, if you start the round in this space, all 👣 you gain are doubled and count as 2 👣. Alternatively, if you had 6 👣 and started 3 spaces away, you could use the first 3 👣 to move into this space, then your remaining 3 👣 would be doubled, giving you 6 👣 so you could move 6 more spaces.

Start and Finish Space



The start and finish space are each one big space and are adjacent to all spaces they touch.

When any runner figure reaches the finish space, it triggers the end of the game and the winner is determined (see "End of Game" on this page).

If you move into the finish space and still have any 👣 remaining, move to the start space and continue moving from there.

END OF GAME

When any runner figure reaches the finish space, it triggers the end of the game. Finish playing the current round, then the game ends and the winner is determined.

If a player's runner figure reaches the finish space and still has any 👣 remaining, they move to the start space and continue moving from there in case a tiebreaker is required.

How to Win

If only 1 player reaches the finish space during a round, they win and become the Cubitos Champion!

If 2 or more players reach the finish space during the same round, the player who goes the most distance beyond the start space wins. If players are still tied, then **all** players continue the race by playing an additional round and the player who goes the most distance beyond the start space wins. If players tie again, they all keep playing additional rounds until the tie is broken.



ADDITIONAL RULES

This section covers additional explanations beyond the basic rules required to play.

Fan Track

Players advance their runner figure 1 space along the fan track each time they bust and each time they gain a . The first time a player advances on the fan track, they must take their runner figure from the bleachers (not the racetrack) and place it in the first space numbered "1." Unless an ability specifically states otherwise, players always gain any and shown on the space to which they just moved.

Some abilities refer to your count. Your current count is equal to the number of spaces that your runner figure advanced on the fan track, represented by the spaces numbered 1 to 13. For example, if your runner figure is still on the bleachers, you have a count of 0. If you advanced 3 spaces on the fan track, you have a count of 3.

If you reach the last space numbered "13" and need to advance again, your runner figure remains in the space and you simply gain 6 again.

Compare

Red cards require players to compare the total number of that they have during the Run Phase to determine which player has the most . Only in a player's **Active Zone** are considered for this total.

If 2 or more players are tied for the most , the ability card may list a tiebreaker that reads "Start player die breaks ties." In this case, the player closest to the start player die wins the tie, starting with the player with the start player die and continuing clockwise around the table. If 2 or more players are tied for the most and the ability card does not list a tiebreaker, then no player is considered to have the most .

Once a player is determined to have the most , they are considered to have the most for the remainder of that round. This means that the player can use and lose dice with during the Run Phase and still be considered to have the most .

Abilities

Unless specifically stated otherwise, abilities only last until the end of the round.

When an ability says "up to" in its effect, you may choose zero.

Adding Dice to Your Roll

Some abilities feature the symbol. This means that you select the indicated amount of dice from your Draw Zone and roll them into your Roll Zone.

Note that you roll these dice into your Roll Zone and move any hits to your Active Zone as normal; this is a free roll with just the selected dice and you cannot bust on this roll. When selecting dice, as normal, if you run out of dice in your Draw Zone but still need to select more dice, move all dice from your Discard Zone to your Draw Zone and then continue selecting. If any rolled dice show a symbol that has a Now ability, you may use the ability as normal.

Mandatory Hits

During your Roll Phase, you must move hits to the Active Zone. When you roll a hit, you cannot choose to keep it in your Roll Zone and attempt to roll a different result when you push, for example.

Active Dice

Some abilities refer to active dice (**active**). All of the dice in your Active Zone are considered active dice, regardless if they are showing a symbol or a blank.

Losing Dice

The "Lose a Die" reward space on some racetracks and card abilities allow (or force) you to lose a die. When you lose a die, take it from any zone (unless otherwise stated) and return it to the corresponding dice tray. Dice returned to the tray can be bought as normal. You cannot choose to lose the start player die. Gray dice lost this way can accumulate in a pile somewhere on the table or be returned to the box.

If an ability states that you must lose a die with the "not optional" clarification, you must lose the die even if you choose not to use the ability.

Free Dice

Some abilities allow you to gain a die for free without paying its cost. Gaining free dice has no effect on your ability to still buy 2 dice of different colors as normal.

Movement Effects

Shortcuts and jet packs are the 2 types of movement effects in the game.

Unlike a reward space which can only be gained when you end your Move step in the space, movement effects can be activated while moving during your Move step.

Movement effects are optional. If you choose not to use (or cannot pay to use) the movement effect, it is treated as an open space.

You may only use a movement effect space once during your Move step; you cannot use the same space twice during the same round.

Moving Through Water

Water cannot normally be moved into but some abilities allow you to move into a water space, as described on the card.

If you end your movement in a water space and the only adjacent spaces are water, you must use an ability to move into the adjacent water spaces. Players should be careful to avoid getting stuck in spaces surrounded by water!

Public Supply

If all of the dice in a tray run out, then dice of that color cannot be bought. If a player loses a die and it is returned to the tray, then the die may be bought as normal.

In the unlikely event that any of the tokens run out, simply use an alternative token like coins. There is no limit to the number of and tokens.

Busting With Fewer Dice

If you push with at least 3 dice already in your Active Zone and risk busting, you risk busting each time you push for the remainder of that Roll Phase regardless of how many dice you have in your Active Zone. In other words, once you risk busting, you always risk busting even if you have fewer than 3 dice in your Active Zone. This is important to remember when abilities have you lose or move dice in your Active Zone.

CARD CLARIFICATIONS

This section covers additional explanations for card abilities that may be referenced during play.

Champion

Only the player with the most ⚔ may use this ability. When you draw during your next Roll Phase, you may move **all** dice from your Draw, Active, and Discard Zone to your Roll Zone, regardless of your draw amount. You may choose to leave any dice in their zone instead of moving them to your Roll Zone.

Crabby

Only the player with the most ⚔ may use this ability. When you use this ability, take 1 die in any of your zones and give it to another player with the fewest total ⚔ in their Active Zone. The player must place the die in their Discard Zone. Giving a player the die has no effect on their ability to still buy 2 dice of different colors as normal.

If 2 or more players tie for the fewest total ⚔, then the player with the most ⚔ chooses which tied player is given the die.

El Bandito

Each player with ⚔ may use this ability, not just the player with the most ⚔.

When you use this ability, first determine how many players have fewer total ⚔ than you. Red dice with a power symbol are considered 2 ⚔ instead of only 1 ⚔. Only dice in players' Active Zones are counted; do not count ⚔ from red dice in Draw, Roll, and Discard Zones.

For each player with fewer ⚔ than you, gain 1 ⬛.

If you have at least 1 ⚔, players with zero ⚔ are considered to have fewer ⚔ than you. If a player has the same number of ⚔ than you, they are not considered to have fewer ⚔ than you (there is no tiebreaker for this ability).

Jacques Couteau

Each player with ⚔ may use this ability, not just the player with the most ⚔.

When you use this ability, first determine how many players have fewer total ⚔ than you. Red dice with a power symbol are considered 2 ⚔ instead of only 1 ⚔. Only dice in players' Active Zones are counted; do not count ⚔ from red dice in Draw, Roll, and Discard Zones.

For each player with fewer ⚔ than you, choose 2 non-red dice in any of your zones and roll them. Move any hits to your Active Zone and any misses stay in your Roll Zone. This is not considered pushing, so you do not bust if all of the dice roll a miss. If any rolled dice show a symbol that has a Now ability, you may use the ability as normal.

If a player has the same number of ⚔ than you, they are not considered to have fewer ⚔ than you (there is no tiebreaker for this ability).

Mr. Soldier

Only the player with the most ⚔ may use this ability. When you use this ability, gain 3 ⬛ and 2 👣.

Punch Guy

Only the player with the most ⚔ may use this ability. When you draw during your next Roll Phase, white and green dice do not count towards your draw amount. The dice still count towards busting if you roll all misses.

Supah General!

Only the player with the most ⚔ may use this ability. When you use this ability, gain 👣 equal to your 🚩 count. For example, if you have a 🚩 count of 5, you would gain 5 👣.

Batter Beaver

If you choose to use the Now ability, you must do so at the time it is rolled. When you use this ability, select 2 dice from your Draw Zone and roll them into your Roll Zone; this is a free roll with just the selected dice and you cannot bust on this roll. Then move any hits to your Active Zone. If you do not have enough dice in your Draw Zone, move all dice from your Discard Zone to your Draw Zone and then continue selecting dice.

When you use the Run ability, you must also take 1 die from any of your zones and return it to its tray if you gained at least 1 ⬛ this round. The ⬛ can be gained from a reward space, fan track, dice symbol, ability, or any other effect. You must use the Run ability even if you choose not to use the Now ability.

If you bust during your Roll Phase, you cannot use the 🐻 during your Run Phase since it would be moved from your Active Zone to your Discard Zone. Since the Run ability did not get resolved, you do not lose the 🐻 in this case.

Benchwarmer

When you use this ability, you may lose the 🐻 die and one other die from any of your zones. Return the dice to their corresponding dice tray (gray dice can accumulate in a pile somewhere on the table or be returned to the box).

Dugout

If you choose to use the Now ability, you must do so at the time it is rolled. When you use this ability, select 3 dice from your Draw Zone and roll them into your Roll Zone; this is a free roll with just the selected dice and you cannot bust on this roll. Then move any hits to your Active Zone. If you do not have enough dice in your Draw Zone, move all dice from your Discard Zone to your Draw Zone and then continue selecting dice.

Mr. Bats

When you use this ability, you may choose to either gain 2 🟠 or gain ⬛ equal to half of your 🚩 count rounded down. For example, if you have a 🚩 count of 5, you would gain 2 ⬛.

Pinch Eater

If you choose to use the Now ability, you must do so at the time it is rolled. When you use this ability, take any 1 die in your Roll Zone and set it on any face of your choice in your Active Zone. If that die shows a symbol that has a Now ability, you may use the ability as normal.

If you do not have any dice remaining in your Roll Zone, then this ability has no effect.

Reliever Beaver

When you use this ability, you may choose any 1 die in your Roll Zone and return it to its corresponding dice tray (gray dice can accumulate in a pile somewhere on the table or be returned to the box).

If you do not have any dice remaining in your Roll Zone, then this ability has no effect.

The Babe

When you use the main ability, gain 5 .

When you use the power symbol ability, also gain 1 and then you must lose the die. You must lose the die even if you choose not to use the ability.

Bad Cheese

When you use the main ability, gain 2 .

When you use the power symbol ability, also gain 3 and then you must lose the die. You must lose the die even if you choose not to use the ability.

Cheese Boy

If you have at least 1 brown die in your Active Zone, gain 2 . If you have at least 1 orange die in your Active Zone, you may also lose any 1 die in your Roll Zone and return it to its tray. If you have brown and orange dice in your Active Zone, you may use either or both abilities as you wish.

Ledercheesen

The main Active ability is ongoing and may be used each time you push and do not bust. When you use this ability, take 1 die in your Draw Zone and roll it into your Roll Zone. (See "Adding Dice to Your Roll" on page 13.) If the rolled die shows a symbol that has a Now ability, you may use the ability as normal.

The power symbol Run ability allows you to gain 1 for every 4 dice you have in your Active Zone. For example, if you have 7 dice in your Active Zone, you would gain 1 .

If you have multiple in your Active Zone, you may use the Active and Run ability multiple times.

Reckless Cheese

This ability is ongoing and may be used each time you push and do not bust.

Since reward spaces and movement effects can only be used during your Move step, you cannot gain rewards or activate movement effects with this ability during your Roll Phase.

Stinky Cheese

When you use the main ability, gain 2 .

When you use the power symbol ability, light and dark gray dice do not count towards your draw amount when you draw during your next Roll Phase.

The Big Cheese

You may either gain 1 or gain equal to half your count rounded down. For example, if you have a count of 5, you would gain 2 .

The Cheese Stands Alone

The Now ability must be used at the time it is rolled. If you roll a and have fewer than 3 dice in your Active Zone, it still counts as a push when you roll again to fulfill the Now ability's requirements, even if there is no risk of busting.

If you roll multiple at the same time, you are forced to push only one more time, not one more time for each you just rolled. However, if you roll on separate rolls, each roll will force one more push.

When you use the Run ability, gain 3 .

Keep On Rollin'

If you were to bust and have a in your Active Zone, you may lose the die and return it to its tray to not bust. You may then choose to either push (and risk busting again) or pass and end your Roll Phase.

Piña Cubelada

When you use a in your Active Zone, you cannot bust the next time you push even if you roll all misses. If you choose to push again after that roll, then you risk busting unless you use another on a different green die. If you choose not to push, then this ability has no effect.

Pineapple Rocks

The Active abilities are ongoing and may be used each time you push. When you use the main ability and push during your Roll Phase, first move the from your Active Zone into your Roll Zone. The will be rolled along with all of the other dice in your Roll Zone.

When you use the power symbol ability, you must also move another die from your Active Zone (if able) into your Roll Zone. Rolling more dice increases your chance of rolling a hit and avoid busting.

Punk Fruit

If you bust and use this ability, keep all your green and gray dice in your Active Zone but move all other dice in your Active Zone to your Discard Zone. Advance your runner figure 1 space on the fan track and gain any rewards for busting as normal.

During your Run Phase, you may use a in your Active Zone to take up to a total of 9 different colored dice in your Draw and Roll Zones and roll them once. Move any hits to your Active Zone and any misses stay in your Roll Zone. If any rolled dice show a symbol that has a Now ability, you may use the ability as normal. If you have multiple in your Active Zone, you may use this ability multiple times. Any dice in your Active Zone can be used as normal during your Run Phase.

Light and dark gray dice are both considered the same color of gray for this ability. The start player die is considered to be a unique color for this ability.

Rock On

The Active ability is ongoing and may be used each time you push. When you use the main ability and push during your Roll Phase, first move the from your Active Zone into your Roll Zone. The will be rolled along with all of the other dice in your Roll Zone. Rolling more dice increases your chance of rolling a hit and avoid busting.

Rolling Stoned

When you use this ability, take any of your light and dark gray dice in any of your zones and roll them. Move any hits to your Active Zone and any misses stay in your Roll Zone. If you roll at least 1 hit, then you do not bust and you may continue to push or pass. If you do not roll any hits, then you bust as normal. If you do not roll any hits and have another in your Active Zone, you may use the die to perform this ability again.

You may only use this ability if you were to bust after pushing.

Up to 11

The main Active ability is ongoing and may be used each time you push. When you use the main ability and push during your Roll Phase, first move the from your Active Zone into your Roll Zone. The will be rolled along with all of the other dice in your Roll Zone.

You may only use the Run ability if you have a green die with a power symbol in your Active Zone during your Run Phase.

Bahama Llama

When you use this ability, gain 3 and 1 . You may use the 1 to move into a water space any time during the Move step of your Run Phase.

If you end your movement in a water space and the only adjacent spaces are water, you must use an ability to move into the adjacent water spaces. Be careful to avoid getting stuck in spaces surrounded by water!

If you move into a jet pack space during your Move step and have any remaining from this ability, those are doubled and can be used to enter water spaces. For example, if you have 2 remaining and move into a jet pack space, you may move up to 4 water spaces during your Move step.

Bob

After your Move step is finished but before you proceed to your Buy step, you may gain 1 reward space that is 1 or 2 spaces away. When you are counting spaces, you may use any space including water spaces. You cannot use this ability to gain a reward space from the space that you ended your Move step in. If you started the round in a reward space and moved 1 or 2 spaces away, you may use this ability to gain that reward space. If you have multiple , you may use each die to gain the same reward space if desired.

Chilly McChillster

When you use this ability, take all of your dice in your Roll Zone and roll them. Move any hits to your Active Zone and any misses stay in your Roll Zone. This is not considered pushing, so you do not bust if all of the dice roll a miss. Then repeat this process a second time. If any rolled dice show a symbol that has a Now ability, you may use the ability as normal.

Llama-Rama

When you use the main ability, gain 3 .

When you use the power symbol ability, also gain 1 and advance your runner figure 1 space on the fan track. You gain any shown on the space you just moved to but you do not gain .

Llama Shaman

When you use this ability, gain 2 and take 1 red die from the tray for free and place it in your Discard Zone. This has no effect on your ability to still buy 2 dice of different colors as normal. If no red dice are available, you may still gain 2 .

Stogie

If you choose to use the Now ability, you must do so at the time it is rolled. When you use this ability, take all of your gray and white dice in your Draw and Roll Zones and roll them. Move any hits to your Active Zone and any misses stay in your Roll Zone. This is not considered pushing, so you do not bust if all of the dice roll a miss.

Undercover Fish

When you use this ability, gain 2 . You may use 2 to move into water spaces any time during the Move step of your Run Phase.

If you end your movement in a water space and the only adjacent spaces are water, you must use an ability to move into the adjacent water spaces. Be careful to avoid getting stuck in spaces surrounded by water!

If you move into a jet pack space during your Move step and have any remaining from this ability, those are doubled and can be used to enter water spaces. For example, if you have 2 remaining and move into a jet pack space, you may move up to 8 water spaces during your Move step.

Cubasaurus

If you choose to use the Now ability, you must do so at the time it is rolled. When you use this ability, take any 1 die in a tray for free and set it on any face of your choice in your Active Zone. If that die shows a symbol that has a Now ability, you may use the ability as normal. This has no effect on your ability to still buy 2 dice of different colors as normal.

You must lose the die that you gained for free at the end of the round and return it to its tray. If you bust, you must move that die to your Discard Zone as normal and then lose it at the end of the round.

If you bust during your Roll Phase, you cannot use the during your Run Phase since it would be moved from your Active Zone to your Discard Zone. Since the Run ability did not get resolved, you do not lose the in this case.

Dancing Dino

When you use this ability, gain 2 . If you have at least 1 red die in your Active Zone, gain an additional 2 . If you have at least 1 orange die in your Active Zone, you may also gain an additional 1 . If you have red and orange dice in your Active Zone, you may use either or both abilities as you wish.

Pronto Bronto

During your Run Phase, you first determine your total during step 4 and then spend to move during step 5. Therefore, if you have multiple in your Active Zone, you would use all of them to determine how many you gain before actually moving your runner figure.

If you are playing a multi-lap race or multi-track race, only count red lines to the end of your current lap/track.

If a player has already crossed the finish space and you are playing a tiebreaker round, this ability has no effect.

Example

Your runner figure is 5 red lines from the finish space and you have 2 in your Active Zone. Using both of your would give you a total of 4 (2 for each).

Rollosaurus

When you use this ability, gain 4 .

Shimmy Shimmy Dino

When you use this ability, gain equal to the total number of white, light gray, and dark gray dice in your Active Zone.

You Bet Jurassican

When you use this ability, gain 2 . If you have at least 1 brown die in your Active Zone, gain an additional 2 . If you have at least 1 yellow die in your Active Zone, you may also gain an additional 1 . If you have brown and yellow dice in your Active Zone, you may use either or both abilities as you wish.

Wikiwiki Dinosaur

You may count the purple die as one of the different colors you have in your Active Zone.

Light and dark gray dice are both considered the same color of gray for this ability. The start player die is considered to be a unique color for this ability.

Captain Bark

If you have at least 1 white and 1 red die in your Active Zone, you may advance your runner figure 1 space on the fan track. You gain any +1 shown on the space you just moved to but you do not gain ⬛.

When you use the second ability, gain 2 ⬛. You must then lose the 🐶 and return it to its tray. You must lose the die even if you choose not to use the ability.

Dapper Doggie

When you use this ability, gain 🟤 and 👣 from all of the gray dice in your Active Zone an additional time. You must then lose the 🐶 and return it to its tray. You must lose the die even if you choose not to use the ability.

Example

You have 2 🐶 in your Active Zone and 3 🟤 from your gray dice. Using both of your 🐶 would give you a total of 9 🟤 (6 🟤 from your 🐶 plus 3 🟤 from your gray dice), then you must lose both 🐶.

Since the ability is not optional, you must always lose 🐶 in your Active Zone during your Run Phase even if you did not gain any 🟤 or 👣 from your gray dice.

Dr. Livingstone

When you use this ability, gain 2 👣. You must then lose the 🐶 and return it to its tray. You must lose the die even if you choose not to use the ability.

Mr. Dog

When you use this ability, gain 2 ⬛. You must then lose the 🐶 and return it to its tray. You must lose the die even if you choose not to use the ability.

Muggles

If you choose to use the Now ability, you must do so at the time it is rolled. When you use this ability, select 2 dice from your Draw Zone and roll them into your Roll Zone; this is a free roll with just the selected dice and you cannot bust on this roll. Then move any hits to your Active Zone. If you do not have enough dice in your Draw Zone, move all dice from your Discard Zone to your Draw Zone and then continue selecting dice.

The Run ability allows you to gain 2 🟤. You must then lose the 🐶 and return it to its tray. You must lose the die even if you choose not to use the Now or Run ability.

If you bust during your Roll Phase, you cannot use the 🐶 during your Run Phase since it would be moved from your Active Zone to your Discard Zone. Since the Run ability did not get resolved, you do not lose the 🐶 in this case.

Rich Dog

When you use this ability, gain 3 🟤. You must then lose the 🐶 and return it to its tray. You must lose the die even if you choose not to use the ability.

Wizard

This ability is ongoing and may be used each time you push and do not bust. When you use this ability, gain 1 ⬛. You must lose the die during your Run Phase even if you choose not to use the Active ability.

If you bust during your Roll Phase, you cannot use the 🐶 during your Run Phase since it would be moved from your Active Zone to your Discard Zone. Since the Run ability did not get resolved, you do not lose the 🐶 in this case.

Broken Cow

You must use 2 🐱 together to use this ability. If you only have 1 🐱 in your Active Zone, this ability has no effect.

When you use this ability, take any 1 die in a tray for free and set it on any face of your choice in your Active Zone. If that die shows a symbol that has a Now ability, you may use the ability as normal. This has no effect on your ability to still buy 2 dice of different colors as normal.

You must lose the die that you gained for free at the end of the round and return it to its tray. If you bust, you must move that die to your Discard Zone as normal and then lose it at the end of the round.

Cat Tastrophy

When you use this ability, take any 1 die with a value no greater than your 🚩 count from a tray for free and place it in your Discard Zone. This has no effect on your ability to still buy 2 dice of different colors as normal.

If no die with a value equal or lower than your 🚩 count is available, this ability has no effect. Note that light and dark gray dice are considered to have a cost of zero.

Dope Cat

If you have at least 1 brown die in your Active Zone, gain 2 🟤. If you have at least 1 green die in your Active Zone, you may also gain an additional 3 🟤. If you have brown and green dice in your Active Zone, you may use either or both abilities as you wish.

Fast Cat

If you choose to use the Now ability, you must do so at the time it is rolled. When you use this ability, select 2 dice from your Draw Zone and roll them into your Roll Zone; this is a free roll with just the selected dice and you cannot bust on this roll. Then move any hits to your Active Zone. If you do not have enough dice in your Draw Zone, move all dice from your Discard Zone to your Draw Zone and then continue selecting dice.

Fat Cat

When you use this ability to gain 3 👣, you must gain 1 gray die if there are any leftover dice available. This has no effect on your ability to still buy 2 dice of different colors as normal.

Extra gray dice are included, even when playing with a full game of 4 players. Additional gray dice may be available when playing with fewer than 4 players and when players lose dice with rewards or abilities. If no gray dice are available, you may gain 3 👣 without gaining a gray die.

Schmutz

When you use this ability, gain 1 👣. If you lost at least 1 die this round due to a “Lose a Die” reward space or an ability, you also gain 3 ⬛.

Smelly Cat

When you use this ability, gain 2 👣.

Rolling Heights™

JOHN D CLAIR





ROLL MEEPLES • CONSTRUCT BUILDINGS • BUILD THE CITY

It's the 1920's and your career as a general contractor is about to take off.

You have just started your business in a rapidly expanding city. There are, however, other workers who want a piece of the pie.

Will you be able to get the most out of your workers over the next two decades or will another company surpass you?

Will you construct the next famous landmark?

COMING 2021

WWW.ALDERAC.COM/ROLLING-HEIGHTS

DICE BOX ASSEMBLY

To assemble the dice boxes, follow the steps shown in the diagram or visit the following link to view an assembly video: www.alderac.com/cubitos

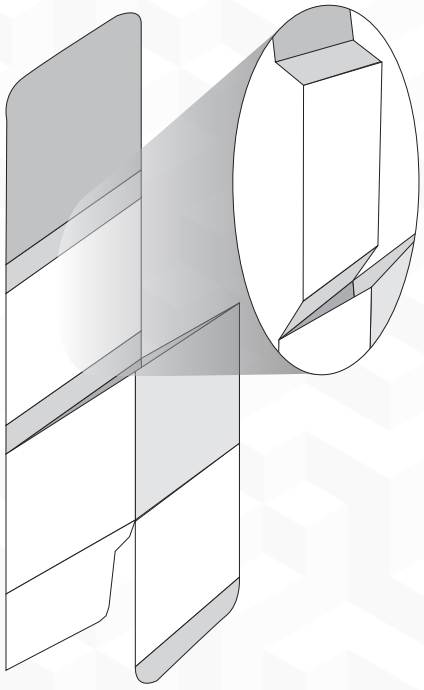

1. Fold the top lid in 4 places.

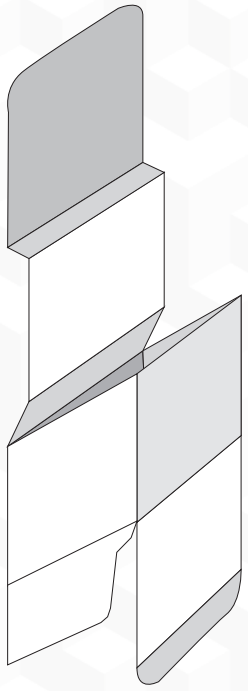

2. This will form a tray to hold the dice when assebmly is completed.

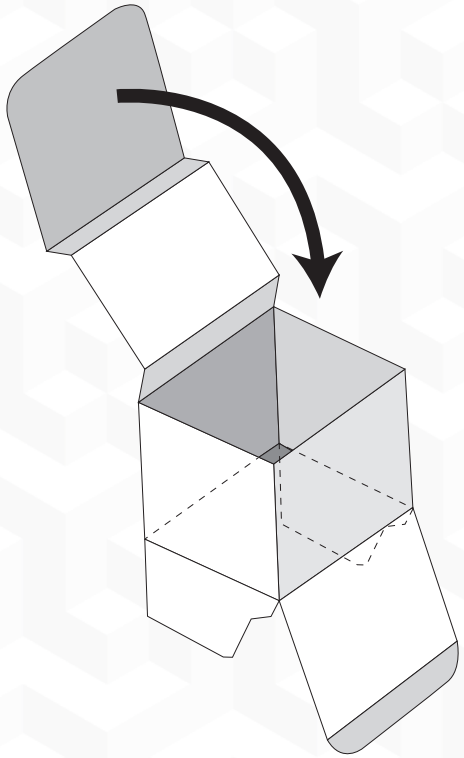

3. Fold the top lid forward and tuck the top flap inside the box.

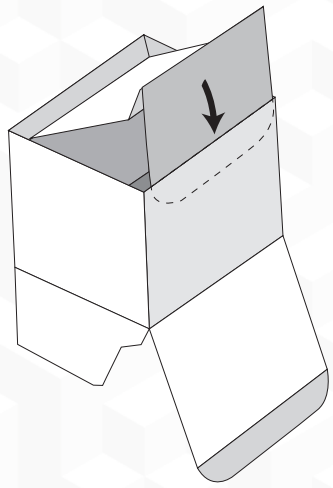

4. Press the flap all the way down to the bottom of the box until the top forms a tray. Once the tray is in position, this side of the box should NEVER be opened.

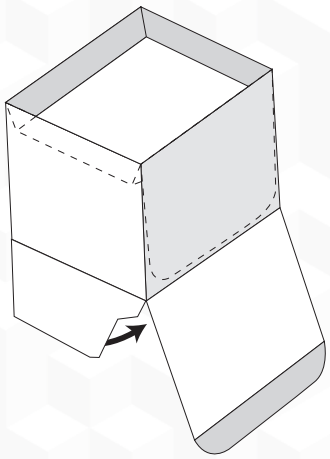

5. Fold the bottom side flaps in.

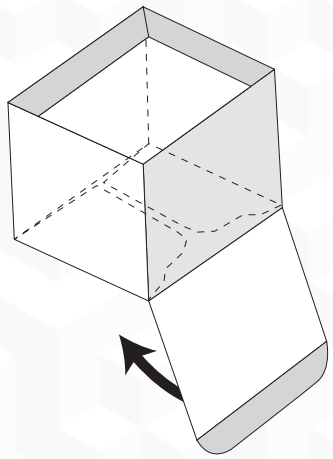

6. Fold the bottom lid and tuck inside the box.

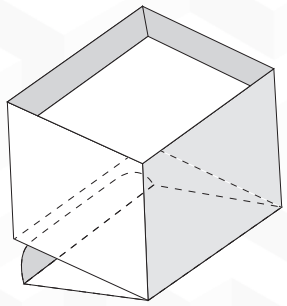

7. The box should only be opened and closed from the lid shown in this diagram. Do NOT open the box from the side that forms the tray.

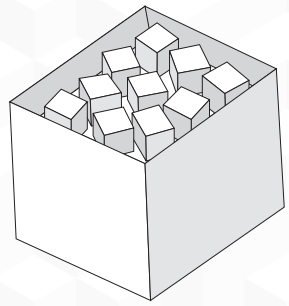

8. Dice can be stored in the tray to be available to players during the game. After the game, dice can be stored inside their box, which is placed inside the main game box.

CUBITOS™

SPACE DESCRIPTIONS

Standard Terrain



OPEN
Can be moved into normally.

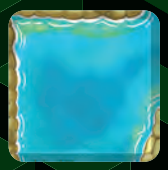

WATER
Cannot be moved into.
*Exceptions apply.

Movement Effects

Movement effects may be resolved during your Move step, even mid-movement.



SHORTCUT
Pay the 🟠 cost to move to the indicated space.



SHORTCUT
Pay the 👣 cost to move to the indicated space.



JET PACK
When you are in this space, double your remaining 👣.

Start and Finish Space



The start and finish space are each one big space and are adjacent to all spaces they touch.

Reward Spaces

If you end your Move step in a reward space, and you didn't start the round in that space, you may gain its reward. Moving through a reward space gives you nothing.



GAIN CREDITS
Gain the indicated amount of ⬛.



GAIN A FAN
Advance your runner figure 1 space on the fan track and gain the 👣 and ⬛ for that space if any.



LOSE A DIE
Take any 1 die of your choice in any of your zones and return it to its tray.



GAIN ANY DIE
Gain any 1 die in any tray without paying its cost and place it in your Discard Zone.



GAIN ANY DIE (COST)
Gain any 1 die in any tray that has a cost equal to or less than the cost listed on the reward space and place it in your Discard Zone.

SETUP

1. **SET UP PLAYERS**
   Give each player:
   - 2 Runner figures
   - 1 Player board
   - 1 Phase token
   - 7 Light gray starting dice
   - 2 Dark gray starting dice
2. **CHOOSE CARD SET**
3. **SET UP RACETRACK**
4. **SET UP DICE TRAYS**
5. **SET UP TOKEN TRAYS**
6. **DETERMINE START PLAYER**

GAMEPLAY

ROLL PHASE

1. DRAW
2. ROLL
3. MOVE HITS TO ACTIVE ZONE
   - PUSH OR PASS?

RUN PHASE

4. - USE ABILITIES
   - RESOLVE ⚔
   - DETERMINE TOTAL 🟠👣
5. MOVE
   - GAIN REWARD SPACE?
6. BUY
7. DISCARD