HUNGRY HUNGRY HIPPOS®

INSTRUCTIONS

2 TO 4 PLAYERS/AGES 4+

Contents

• Game Base • 4 Hippo Bodies • 4 Hippo Heads • 4 Marble Launchers & Guides • 20 Plastic Marbles • Label Sheet

⚠ WARNING:
CHOKING HAZARD-Game contains marbles. Not for children under 3 years.

Object

Make your Hippo gobble the most marbles!

ASSEMBLY AND GAME SETUP

1. Remove the game parts from the bags, then discard the bags. (Leave the marbles in their bag until it's time to play.) Figure 1 shows a game assembled and ready to play. Refer to it as you assemble and set up your game.

Figure 1

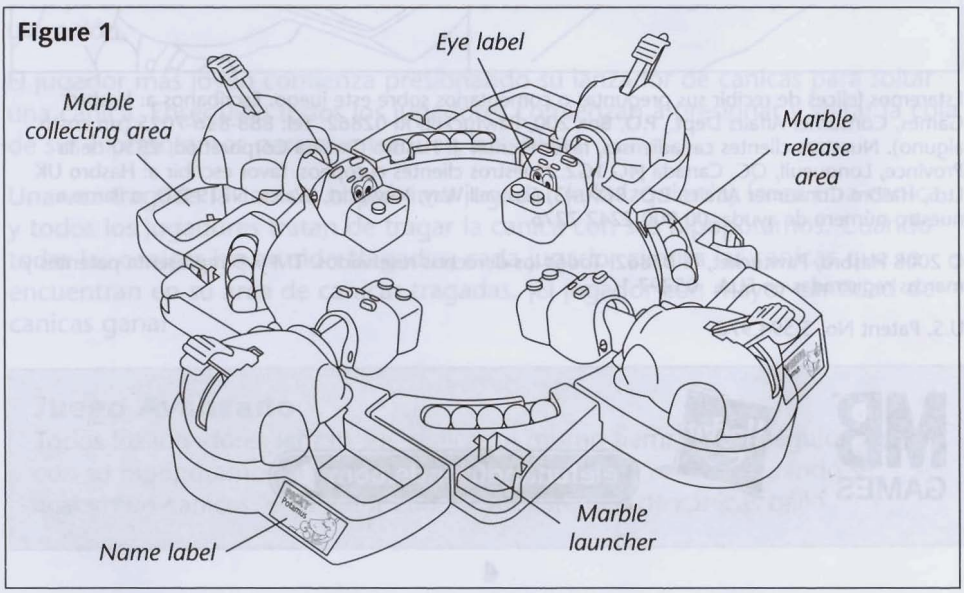

2. Attach the marble launchers: Insert each of the 4 marble launchers into the game base as shown in Figures 2A and 2B.

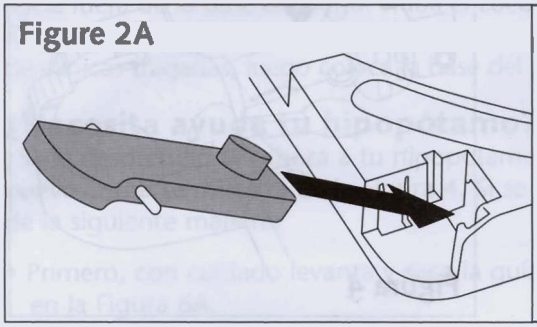

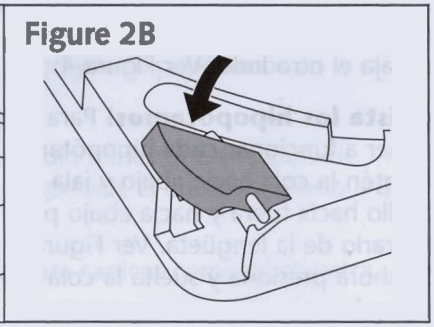

LET'S GET READY!

Attach the Hippos to the game base: To attach each Hippo, slide its front tabs into any side of the game base. Then press down and in to lock the Hippo into place. See Figures 3A and 3B. **Important: Make sure the Hippos are securely locked into the base before you begin playing.**

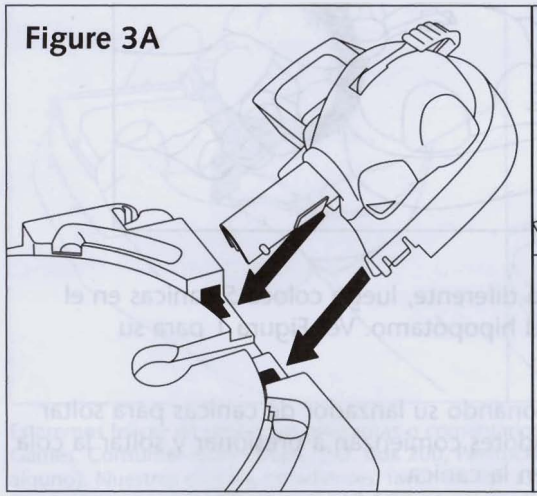

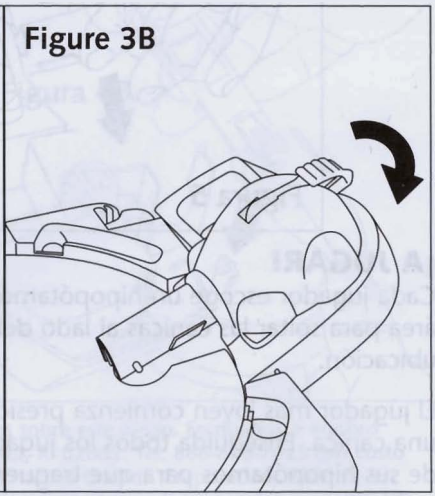

Attach the Hippo heads: Attach each Hippo head by fitting the peg into the hole on one side, then rotating it and attaching the other side. See Figure 4.

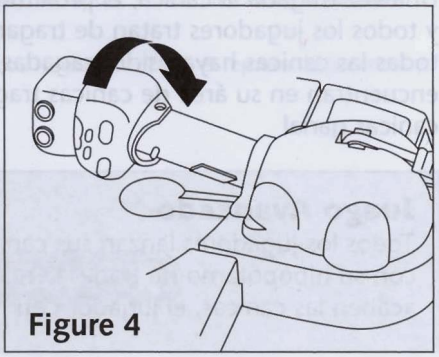

Apply the labels: Carefully apply the matching-color name and eye label to each Hippo. Figure 1 shows their placement.

Get the Hippos ready! To activate each Hippo, hold down its tail and pull its neck out and down, to release it from the tab. See Figure 5. Now press and release the Hippo's tail a few times, to make sure its neck moves forward and back easily.

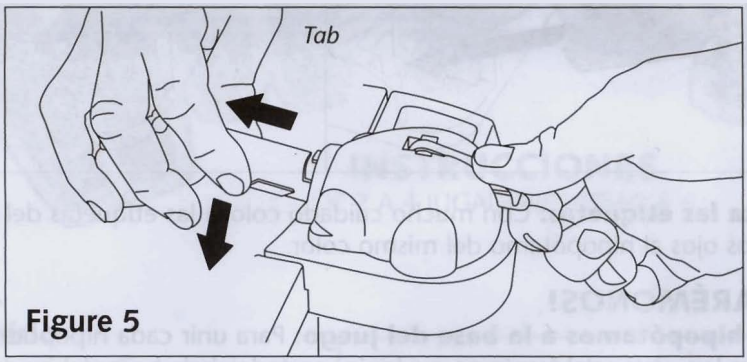

Figure 5

LET'S PLAY!

Each player chooses a different Hippo, then places 5 marbles into the marble release area to the right of it. See Figure 1 for placement.

The youngest player goes first, by pressing his or her marble launcher to release one marble. Now all players quickly start pressing and releasing their Hippos' tails, to try to make them gobble the marble!

After the marble is gobbled, the next player (to the left) launches a marble, and all players try to make their Hippos gobble that marble. When all marbles have been gobbled up, players count the marbles in their marble collecting areas. The player with the most marbles wins!

Advanced Game

At the same time, all players launch all of their marbles, then quickly try to make their Hippos gobble as many as they can. When all of the marbles have been gobbled up, the player with the most marbles wins!

STORING YOUR GAME

Done playing for now? To store your game, pull each Hippo up and out of the game base. Lock its neck in place by pressing its tail and lifting the neck up and onto the front tab. Place the marbles in the marble collecting areas, then place the game base and Hippos in the box.

Does Your Hippo Need Help?

Has your Hippo lost its head? Just fit it back on as shown in Figure 4. If its neck becomes detached, reattach it as follows:

- First, carefully lift the marble guide up and out as shown in Figure 6A.
- Reattach the neck as shown in figure 6B.
- Then reattach the marble guide.

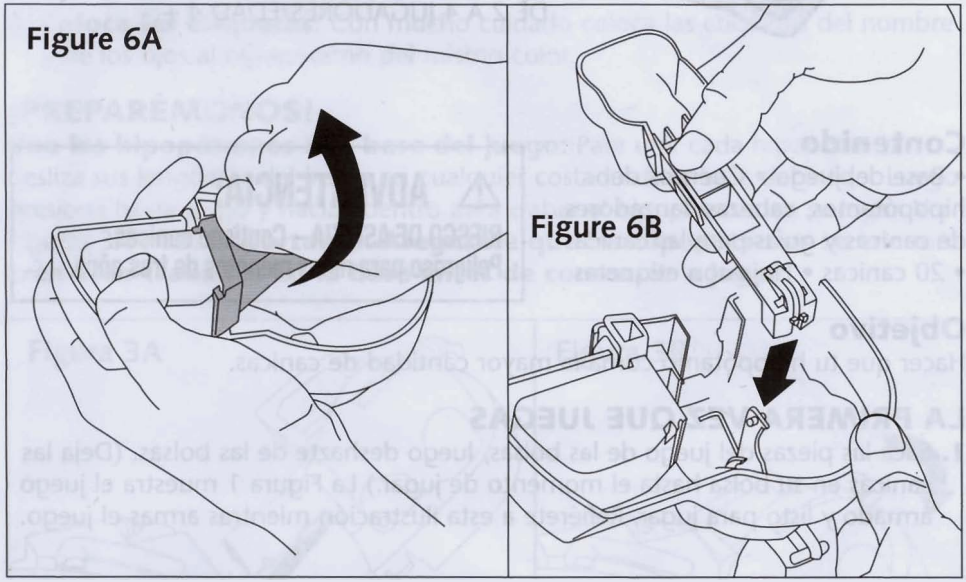

We will be happy to hear your questions or comments about this game. U.S. consumers please write to: Hasbro Games, Consumer Affairs Dept., P.O. Box 200, Pawtucket, RI 02862. Tel: 888-836-7025 (toll-free). Canadian consumers please write to: Hasbro Canada Corporation, 2350 de la Province, Longueuil, QC Canada, J4G 1G2. European consumers please write to: Hasbro UK Ltd. Hasbro Consumer Affairs. P.O. Box 43, Caswell Way, Newport, Wales, NP19 4YD; or telephone our Helpline on 00800 22427276.

© 2008 Hasbro, Pawtucket, RI 02862. All Rights Reserved. TM & ® denote U.S. Trademarks. 05297-I

U.S. Patent No. 5,594,976.

PROOF OF PURCHASE

MB GAMES

Hungry Hungry Hippos®

MB GAMES

Hasbro™

elefunandfriends.com